Set-top Box / Media Gateway
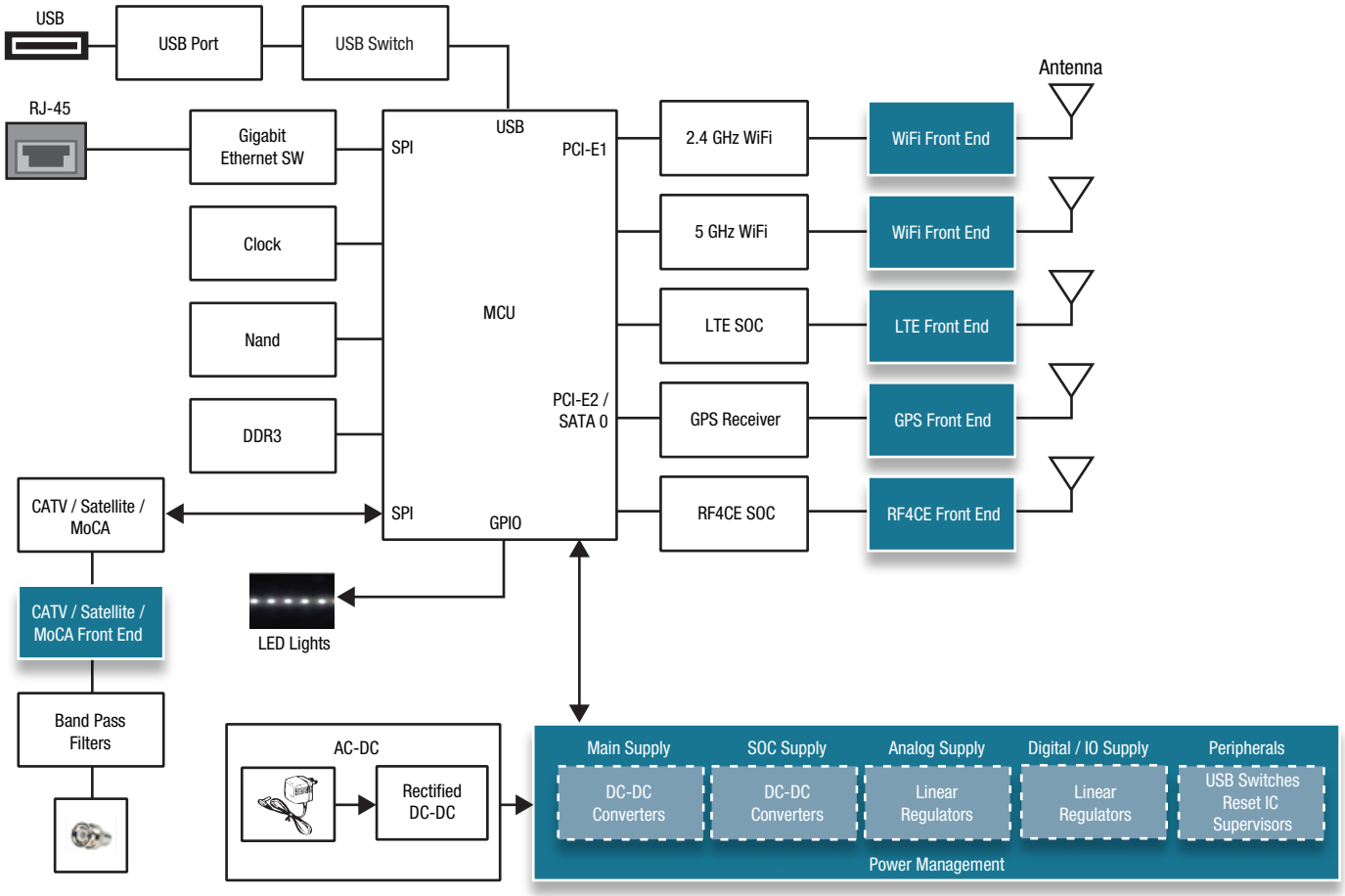
Part numbers link to product information