Reader/Active Antennas/Transmitter Full Duplex 2440
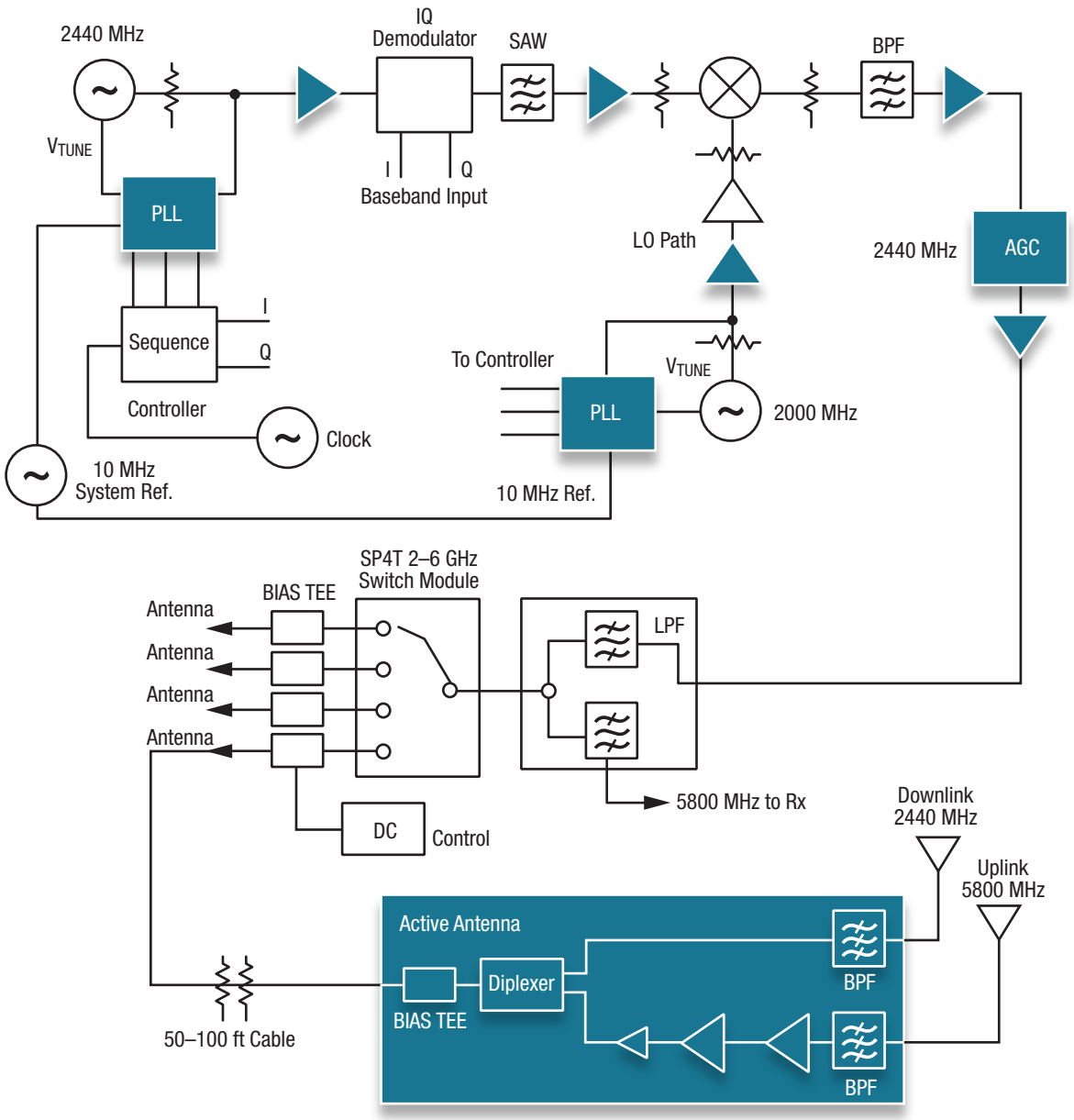
Part numbers link to product information